TheRollerStore.com

Tempest® Hot Air Drying System

Installation Instructions

Sakurai 258

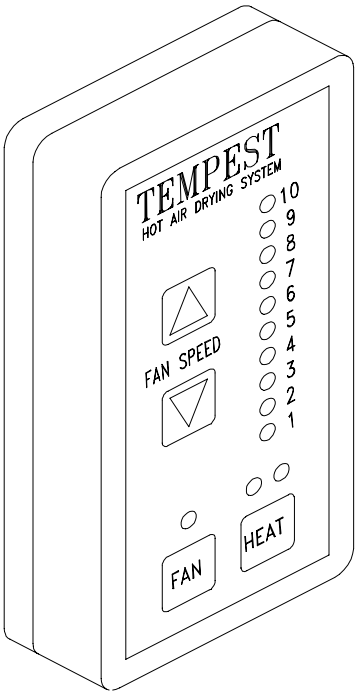

ACCEL® Graphic Systems

X88-47
4/97
Rev-A

GENERAL INFORMATION

ATTENTION TEMPEST® DRYER OWNER!

Accel Graphic Systems provides parts and service through its authorized distributors and dealers. Therefore, all requests for parts and service should be directed to your local dealer.

The philosophy of Accel Graphic Systems is to continually improve all of its products. Written notices of changes and improvements are sent to Accel Graphic Systems' Dealers.

If the operating characteristics or the appearance of your product differs from those described in this manual, please contact your local Accel Graphic Systems' Dealer for updated information and assistance.

Always update your equipment when improvements are made available, especially those related to safety.

Your authorized TEMPEST® Dealer is:

_____

_____

_____

_____

The serial number of your
TEMPEST® HOT AIR DRYING SYSTEM is:

CONTROL BOX _____

FAN UNIT _____

TECHNICAL ASSISTANCE

For technical assistance during the installation, please contact:

ACCEL GRAPHIC SYSTEMS
11103 Indian Trail
Dallas, TX 75229
PHONE (972) 484-6808
FAX (800) 356-6510
E-MAIL accel@dallas.net
WEB SITE www.accelgraphicsystems.com

GENERAL INFORMATION

ELECTRICAL REQUIREMENTS

220 VAC 50/60HZ
20 AMP DEDICATED LINE
NEMA L620R RECEPTACLE

IMPORTANT INFORMATION

The use of heat to accelerate drying may require more frequent lubrication and/or use of a high temperature lubricant in the delivery of the press. Please consult your press manufacturer for specific recommendations.

SAFETY INFORMATION

The Tempest® Dryer contains high voltage and hot surfaces. Never attempt to service or work on the unit unless the power is shut off and the unit is cool.

Visually inspect the thermistors (triangular shaped objects arranged in a honeycombed pattern on the underside of the unit) weekly. If a thermistor is damaged or cracked, do not operate the dryer. Contact Accel immediately for a replacement part.

The fans should be turned on and set at the lowest speed ("0" on the dial when running just spray powder and no heat. This prevents spray powder from accumulating in the thermistors and housings.

TERMINOLOGY

OPS	=	Operator's Side
NOPS	=	Non Operator's Side

GENERAL INFORMATION

HOT AIR VS INFRARED: WHAT MAKES TEMPEST® WORK

Although the technology behind the Tempest® dryer was significant enough to be awarded the GATF Intertech Award it is by no means new. In fact, thermistors have been in use for many years. They were originally used in motors and other devices as a heat controller and later used in refrigeration to turn compressors on and off. It is only in the last 10 years or so that thermistors have been used as a heater.

Heat is generated by the thermistor because of the difficulty of electricity travelling through it when it is a conductor. The thermistor acts as a conductor until it reaches its set temperature and then it becomes a resistor. A thermistor is basically a coated semiconductor designed to switch from a conductor to a resistor at an established temperature.

When a current is applied to the thermistor it initially uses a large amount of electricity and heats up very quickly until it reaches its maximum set temperature. At this point it should not use any more electricity. However, air that is passed through the holes in the thermistor causes it to cool. This activates the thermistor to start using more power again so is can get back to its set temperature. The thermistor is constantly regenerating itself to stay at a constant temperature. This process is called autostabilization.

Thermistors are also the key element that makes the Tempest® dryer safe. Because the set temperature of the thermistor is lower than the flash point of paper, you can place even the most easily burned substrate such as tissue paper, on top of the thermistor element without causing a fire. The tissue won't even char, let alone ignite. If you were to do the same with an IR element, a fire could be started in a matter of seconds. This is particularly important if a jam occurs in the delivery.

The objective of any drying system is to raise the pile temperature to accelerate the drying of the ink. However, heating the paper too much can aggravate problems such as blocking, setoff, mottle, loss of gloss, and loss of halftone definition. Too much heat can also cause the paper to shrink which can cause register problems in multiple pass work. The Tempest® dryer can keep the pile at a lower temperature than IR and still effectively set the ink film.

IR dryers use very high temperatures and a fixed amount of electricity. One of the drawbacks of using a very hot heat source is that heat wants to travel from a very high temperature to a very low temperature. In other words, the heat generated from an IR dryer will travel to the press wall and attempt to increase its temperature because it is cooler than the heat produced by the IR dryer. Because the thermistors used in the Tempest® dryer use lower temperatures, the heated air has had time to cool by the time it reaches the wall of the press, reducing the chance of premature wear to press parts.

GENERAL INFORMATION

HOW DRYING IS ACCOMPLISHED WITH TEMPEST®

Tempest® "sets" the surface of the ink to prevent set-off from one sheet to another and to minimize the use of powder.

Tempest® accelerates the final drying of oil based inks by raising the temperature of the delivery stack.

KEY FACTORS TO REMEMBER ABOUT DRYERS FOR SMALL OFF-SET PRESSES.

Do not expect a dryer to "instantly" dry the ink. Only UV inks and coating dry instantly. The technology and hazards of such systems make them cost prohibitive on small offset presses.

Some jobs may require spray powder. Because dryers for small offset presses do not dry ink instantly, powder will be required from time to time. However, you should expect to see a significant decrease in the amount of powder needed on a regular basis.

Drying time is dependent upon the press speed, paper stock, ink coverage, type of ink etc.

Do not expect a dryer to accelerate the drying of rubber based inks. These inks dry by absorption into the stock and heat does not accelerate this process.

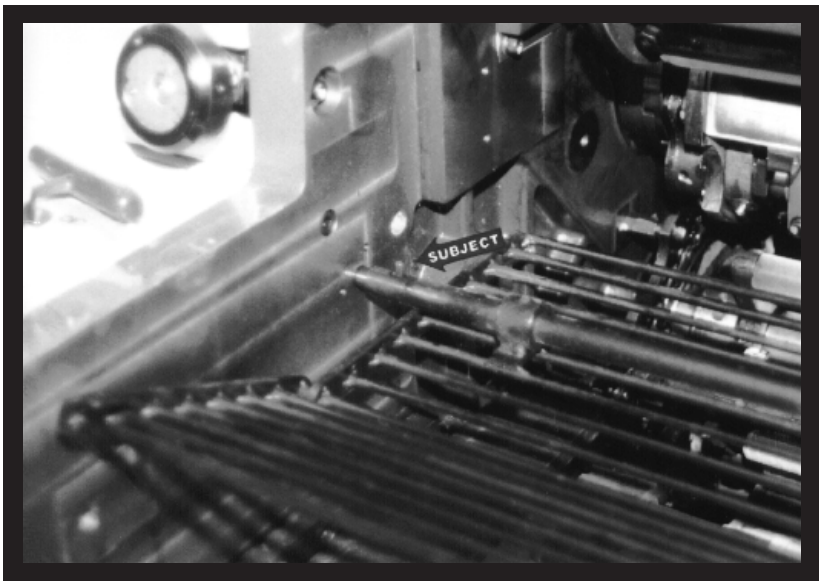
SUBJECT

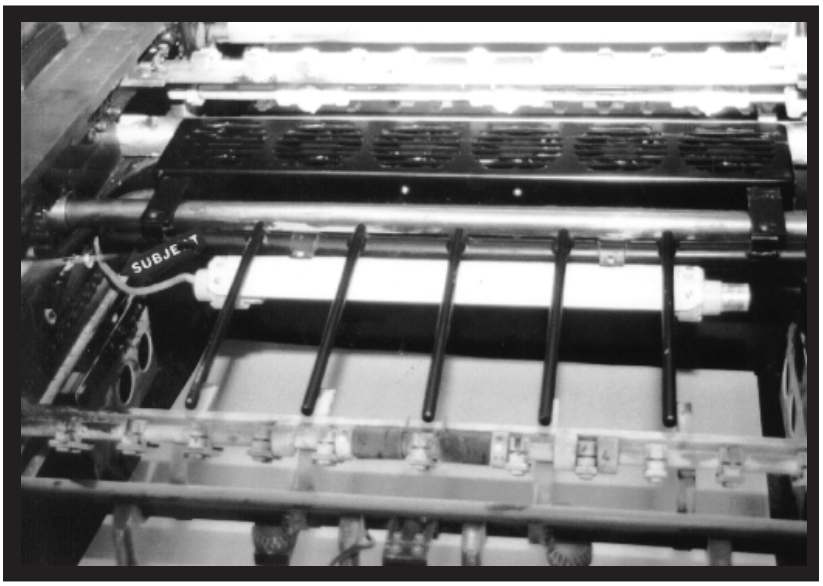

SUBJECT

INSTALLATION

1 Remove all delivery guards including the wire guard directly above the delivery (subject arrow).

2 Locate the wire harness (subject arrow) for the delivery light on the NOPS and unplug it.

3 Remove the air hose (subject arrow) from the blow down bar on the OPS.

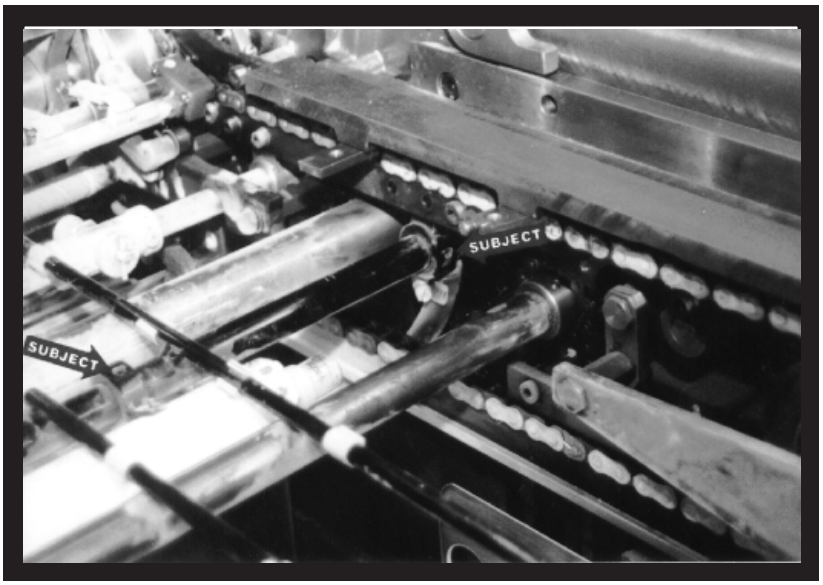
SUBJECT
SUBJECT

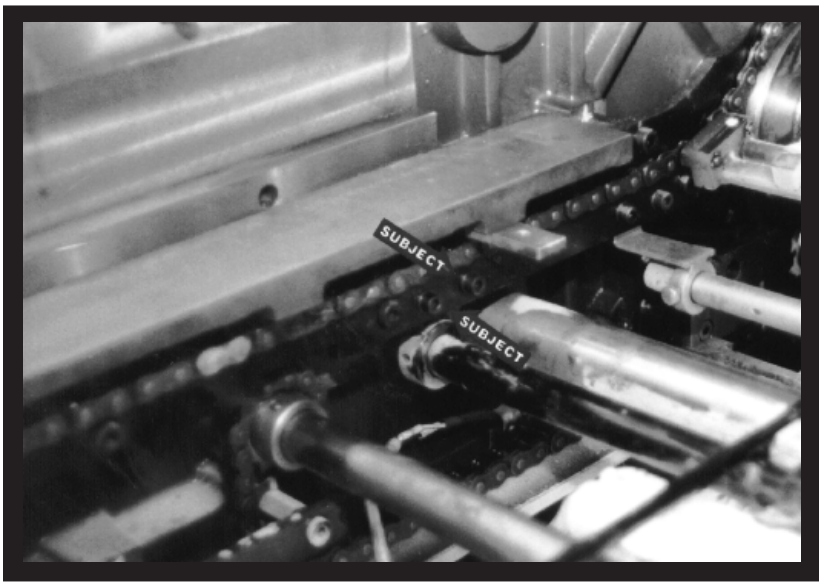
SUBJECT
SUBJECT

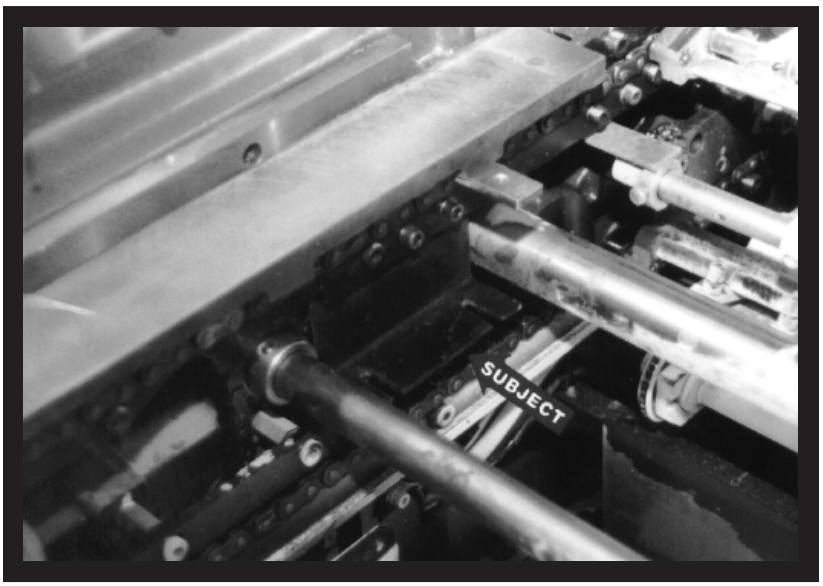
SUBJECT

INSTALLATION

4 Using a 3mm allen wrench loosen the set screws (subject arrows) in the 4 collars that mount the blow down bar to the press, and the collars that mount the light fixture to the blow down bar (only 2 collars pictured).

5 Using a 5mm allen wrench remove the 4 mounting bolts (subject arrows), 2 on each side, for the blow down bar. Remove the blow down bar from the press.

6 Install the Tempest® mounting brackets (OPS & NOPS) in the original blow down bar mounting holes, using the original blow down bar mounting hardware.

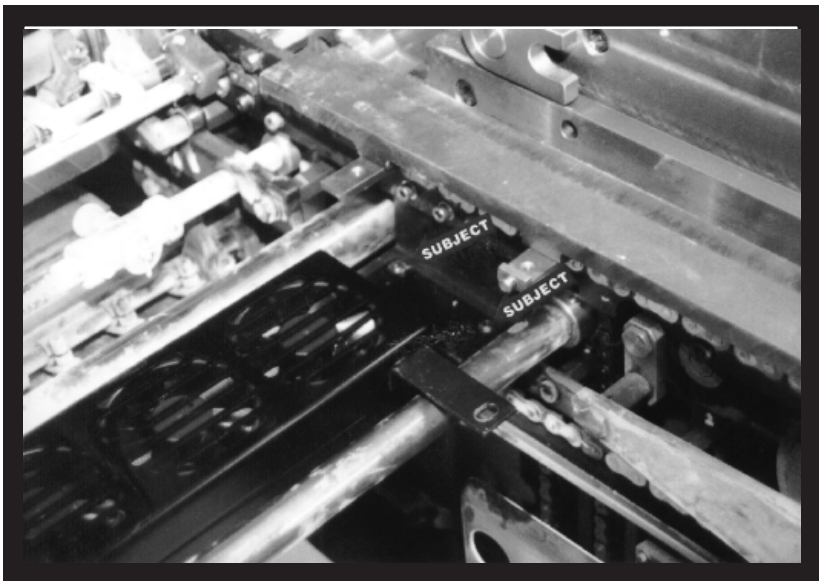
SUBJECT
SUBJECT

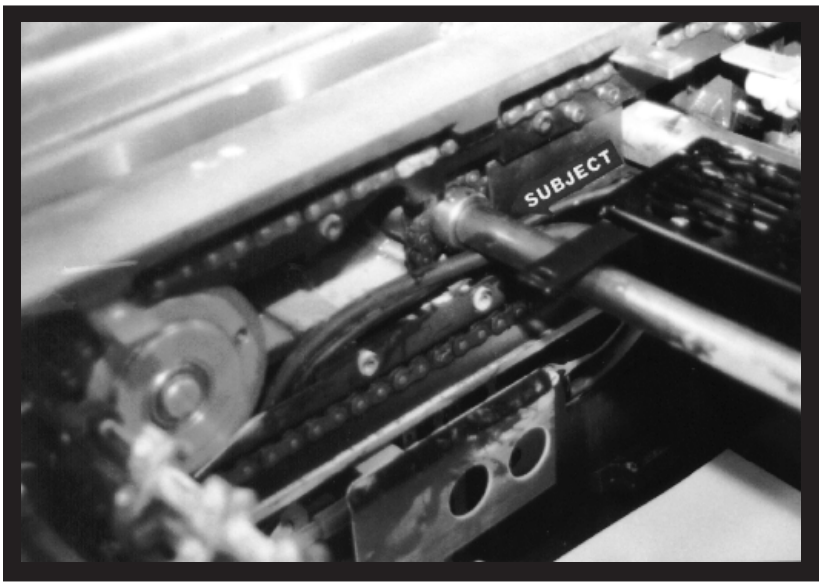
SUBJECT

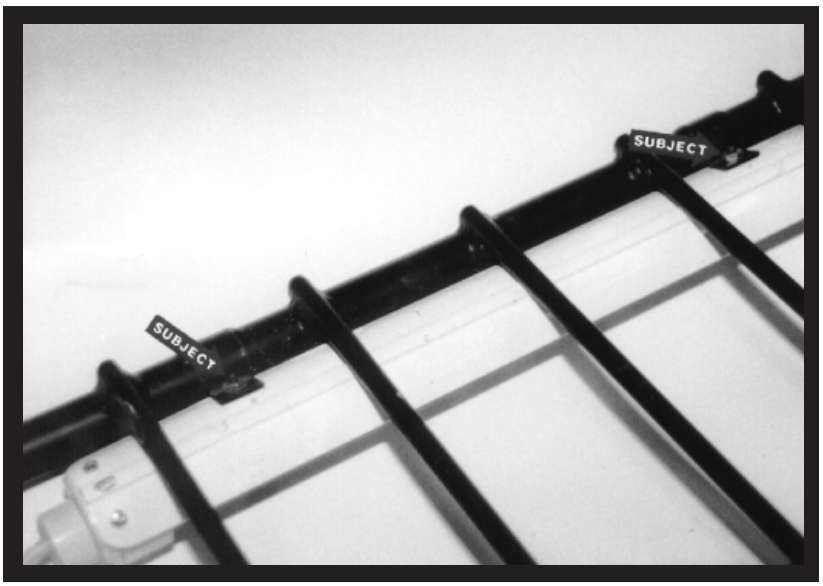
SUBJECT
SUBJECT

INSTALLATION

7 Set the dryer unit on the mounting brackets with the cable exiting the dryer on the NOPS. Secure the dryer to the brackets with the provided hardware (subject arrows).

8 Route the cable under the receding stacker shaft (subject arrow), through the chains, and out of the delivery. Use the provided tie-wraps to secure the cabe as necessary to clear any moving parts.

9 Remove the original light fixture from the blow down bar and attach it to the new blow down bar with the supplied M4 screws, lock washers and nuts (subject arrow).

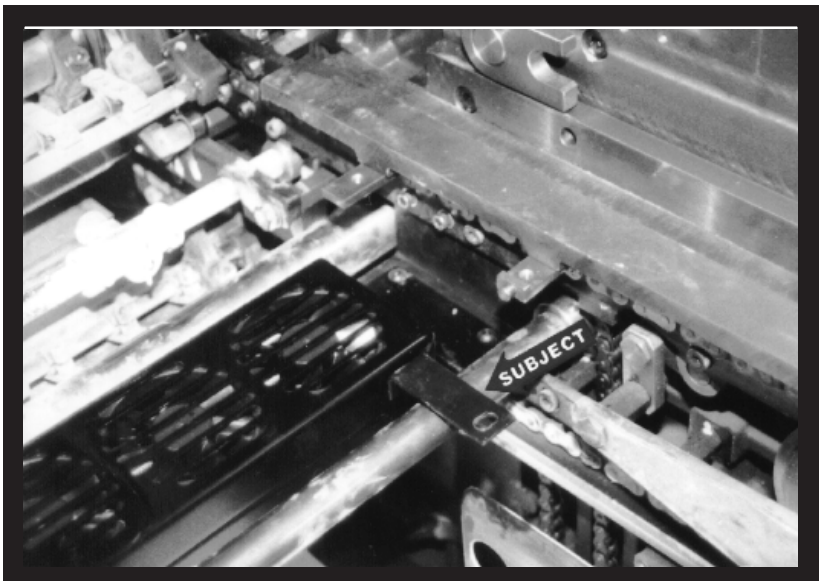
SUBJECT

INSTALLATION

10

Using the provided M6 screws install the new blow down bar/ light assembly to the mounting brackets (subject arrow) on the Tempest unit. Reattach the air hose to the blow down bar and the wire harness to the delivery light. Make sure that the hose and wire harness clear all moving parts after being reconnected.

11

Find a suitable location for the main Tempest® electrical box on the NOPS of the press. Route the impression signal cable through the press to the OPS and into the press electrical cabinet. Connect the wires in this cable to terminals U3-1 and V3-1 (vacuum pump). Use the provided tie-wraps to secure the cable a necessary to clear any moving parts of the machine.

12

Remove the cover from the main Tempest® electrical box and insert the dryer cable through the strain relief on the bottom of the box. Remove the twelve position connector (only six positions are labeled) from the board and insert the wires into the connector by matching the numbered tags on the wires to the matching position on the connector. Secure the ground wire to the stud on the inside of the box. Replace the connector on the board and tighten the strain relief. Replace the cover on the box.

INSTALLATION

13 Attach the Tempest® remote control unit to the press where it is convenient for the operator. This unit is held on the press with the magnetic tape attached to the bottom of the remote.

14 Use the provided tie-wraps to secure all loose cables. Replace all covers and guards.

OPERATION & MAINTENANCE

HOW DRYING IS ACCELERATED WITH TEMPEST®

Tempest® creates a two step drying process when used with oil base inks.

1. Skinning the surface of the ink with hot air to prevent set off .
2. Accelerating the final drying process approximately 20 degrees over the cold stack temperature in the feeder. Heat accelerates the drying process, called oxidation and reduction, of oil based inks.

HOW TEMPEST® WORKS

In general, dryers, including infrared, do not work well with rubber or acrylic based inks. These inks should be avoided when maximum results are desired.

1. When voltage is applied to the thermistors, (triangular shaped coated semiconductors arranged in a honeycomb pattern), they begin to heat.
2. Thermistors heat to a predetermined temperature, in this case about 400 F, and remain at that temperature. This is known as autostabilization.
3. The fans blow air down towards and through the thermistors, creating a flow of hot air to the sheet.
4. Drying of the ink occurs in the two step process as described above.

No dryer totally eliminates the need for spray powder. There may be some jobs, for example a heavy solid on a high gloss sheet, where powder is required. Overall, Tempest® should reduce your spray powder usage significantly, leaving you with a better printed product and cleaner working environment.

TEMPEST® OPERATION

NORMAL OPERATION

Pressing the HEAT switch will illuminate both the green and yellow LEDs on the remote control unit. The green LED indicates that the fans (both dryer and exhaust fans if so equipped) are running while the yellow LED indicates that the dryer is armed and the heat will come on automatically when the press goes on impression. When the press does go on impression, the red LED will illuminate indicating that the heat is on. Pressing the heat button again will disarm the heat mode but the fans will continue to run. To turn the unit OFF press the FAN switch at any time.

FAN ONLY OPERATION

To operate only the fans, press the FAN switch. The green LED will illuminate and the fans will come on (both the dryer and exhaust fans if so equipped). The heat mode of the dryer is not armed and will not come on with impression. To turn the fans OFF press the FAN switch again.

FAN SPEED CONTROL

To adjust the fan to a higher setting, press the up arrow on the remote control unit. To decrease the fan speed press the down arrow on the remote. The fans will automatically go to the minimum speed setting for a few seconds when the press goes on impression and then they return to the previous setting. This reduction in fan speed allows the dryer to heat up more quickly.

OPERATION & MAINTENANCE

INITIAL SETTINGS

Try running Tempest® with the fan speed at "4" with the switch on "HEAT". After about 1" of paper stacked in the delivery, insert the thermometer into the center of the stack. Allow the thermometer to stabilize. It should be approximately 20 degrees above the initial pile temperature.

If the temperature is below that, **increase the fan speed** slightly.

If the temperature is above that, **decrease the fan speed** slightly.

FACTORS THAT EFFECT DRYING

1. Speed of the press.
2. Amount of ink coverage and color.
3. Type of stock being printed.
4. Initial temperature of paper.

In time and with practice you will learn which settings are best for your particular shop.

KEYS TO REMEMBER

1. The Tempest® takes about 12 sheets to come up to full power. The dryer remains on as long as paper is being fed. It does not cycle like an infrared dryer.

2. The pile temperature should be approximately 20 degrees above the initial pile temperature for optimum drying.

3. Use spray powder only when absolutely necessary. A little spray powder goes a long way. Use it sparingly.

4. Inspect the Tempest® weekly.

MAINTENANCE

1. Inspect the dryer weekly. If the thermistors are cracked or have been damaged, do not operate the dryer. Call Accel immediately.

2. Never squirt cleaning solvents, water or any other liquids into the dryer. This may damage electrical components.

3. Any spray powder that accumulates in the dryer should be vacuumed out, not blown out.

4. Make sure all heat shields and guards are in place before operating the dryer printing press.

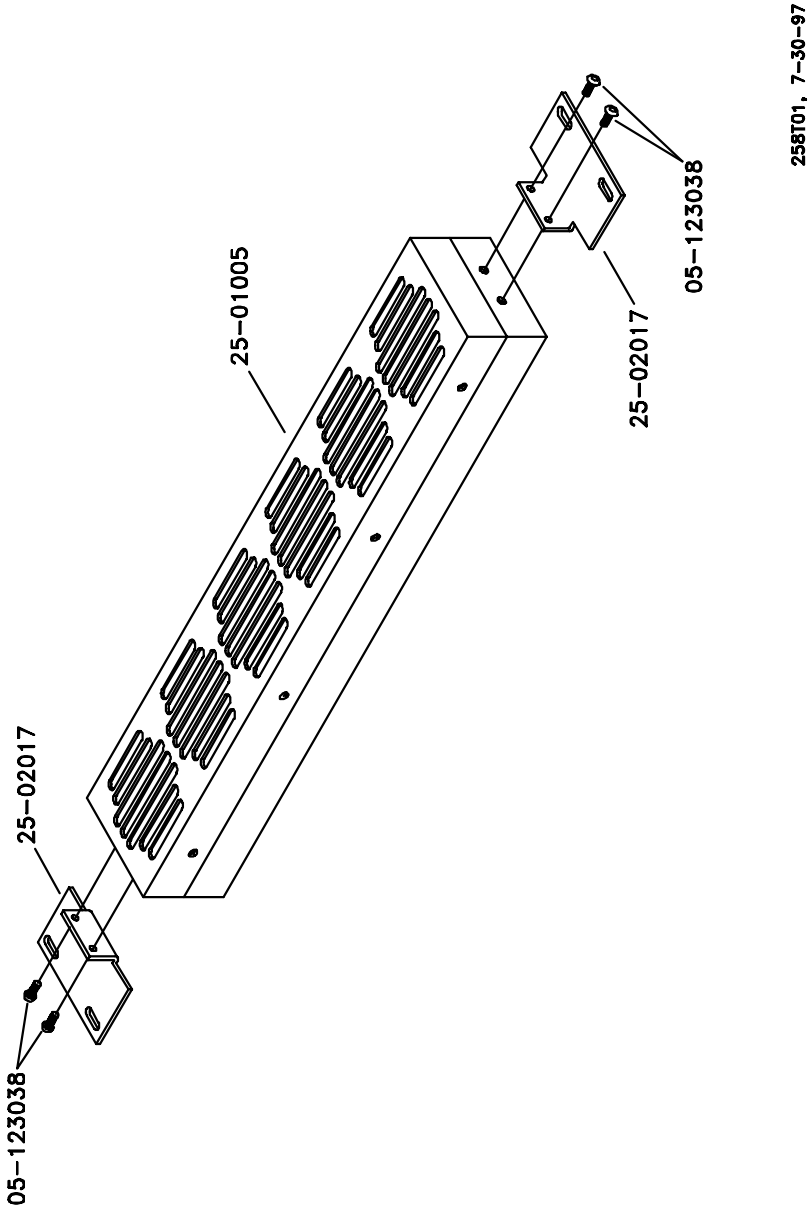
25-02017
05-123038
25-01005
25-02017
05-123038
258T01, 7-30-97

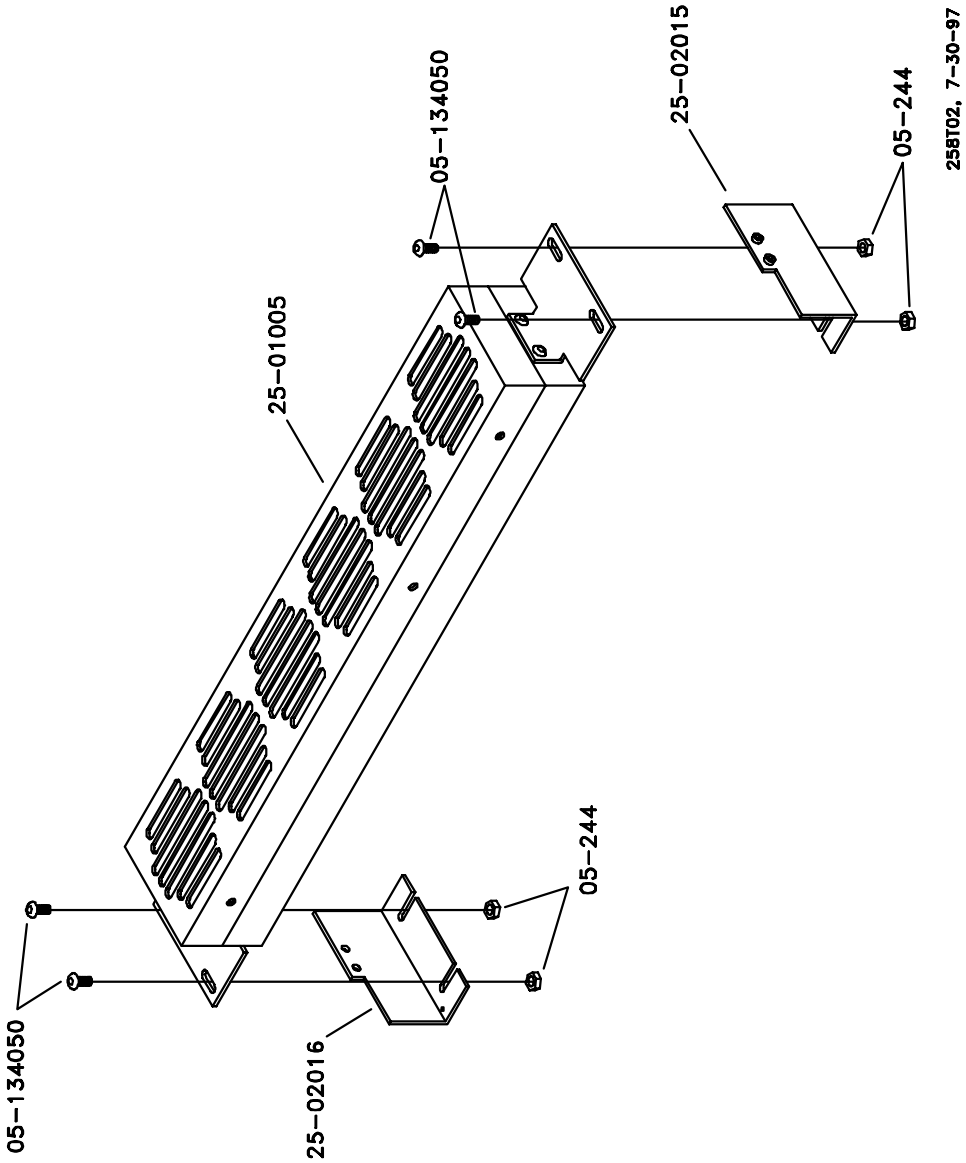
05-134050
25-02016
05-244
25-01005
05-134050
25-02015
05-244
258T02, 7-30-97

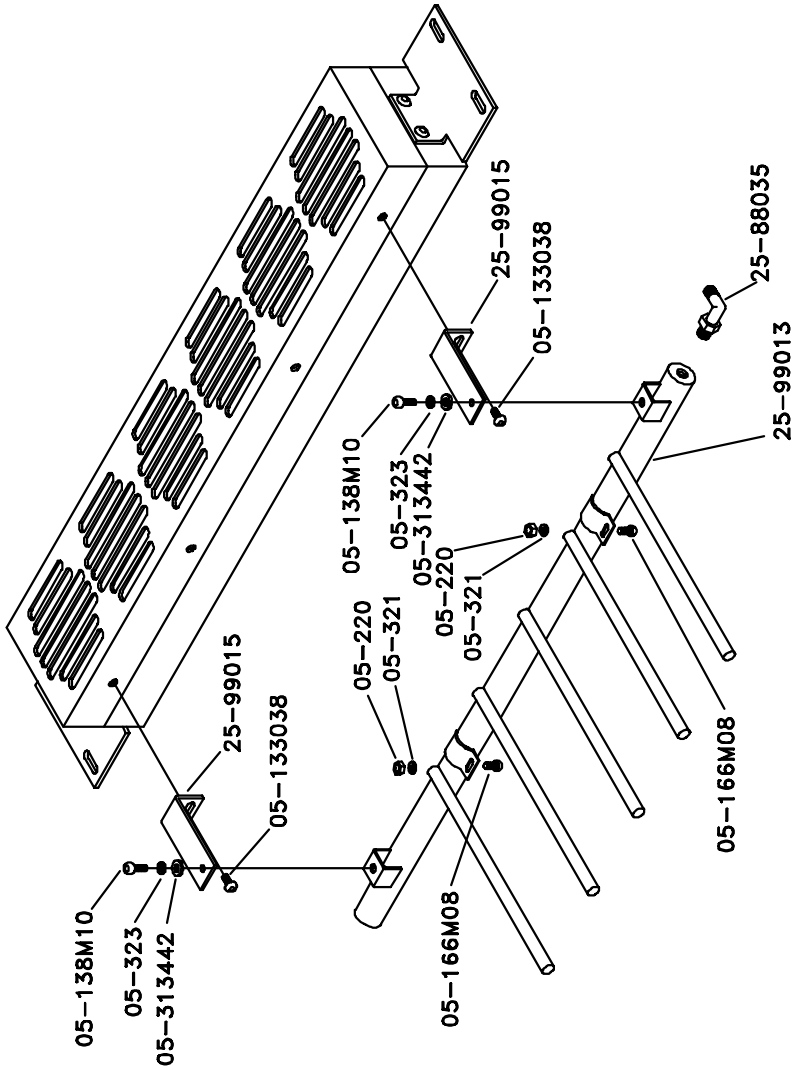

258T03, 7-30-97

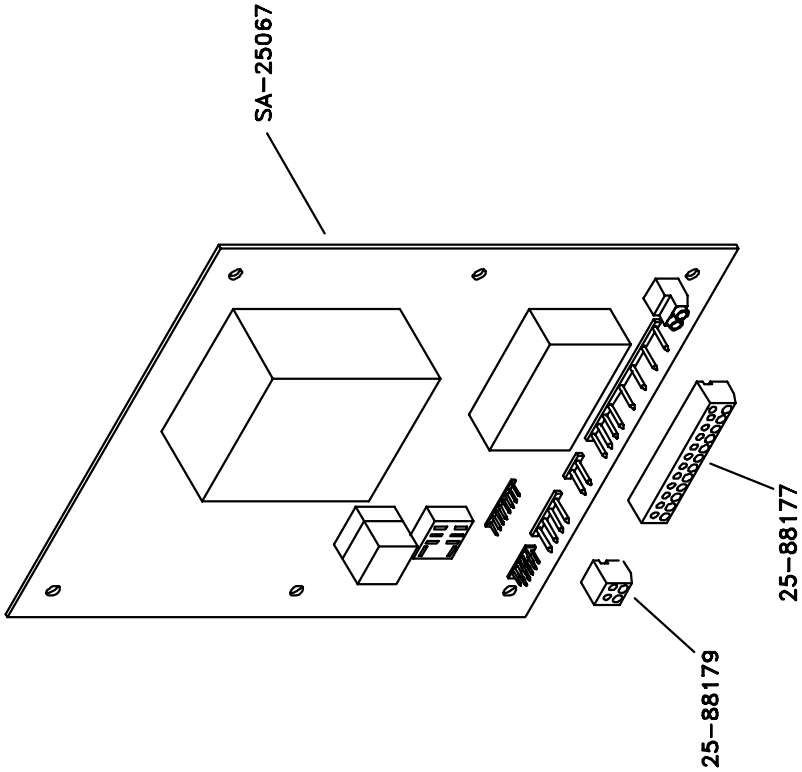

258T04, 7-30-97

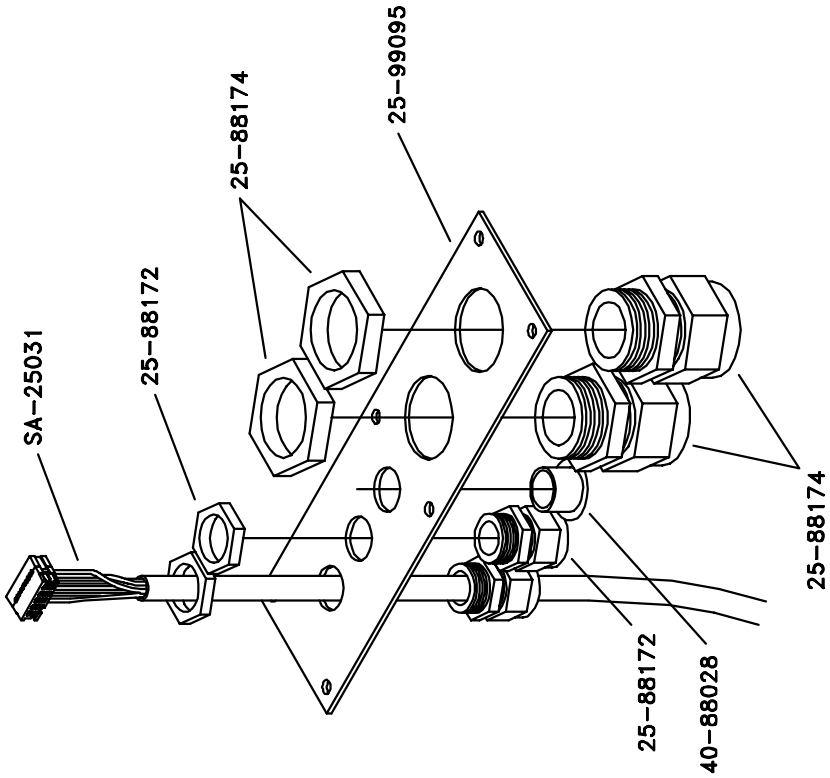

258T05, 7-30-97

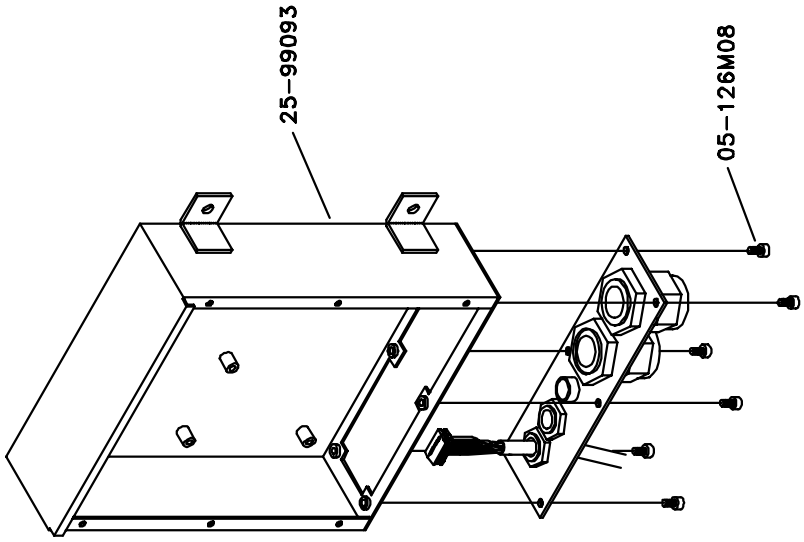

258T06, 7-30-97

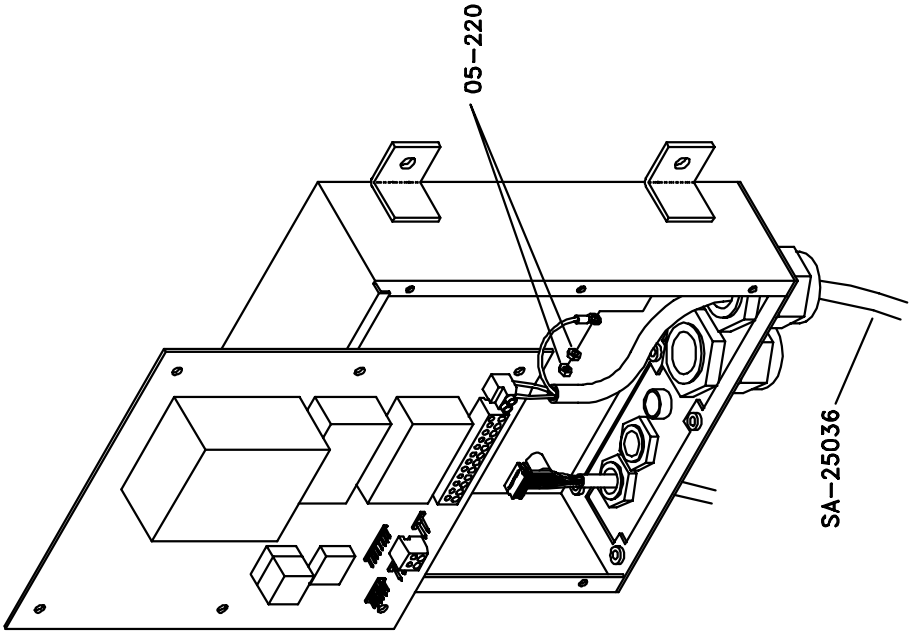

258T07, 7–30–97

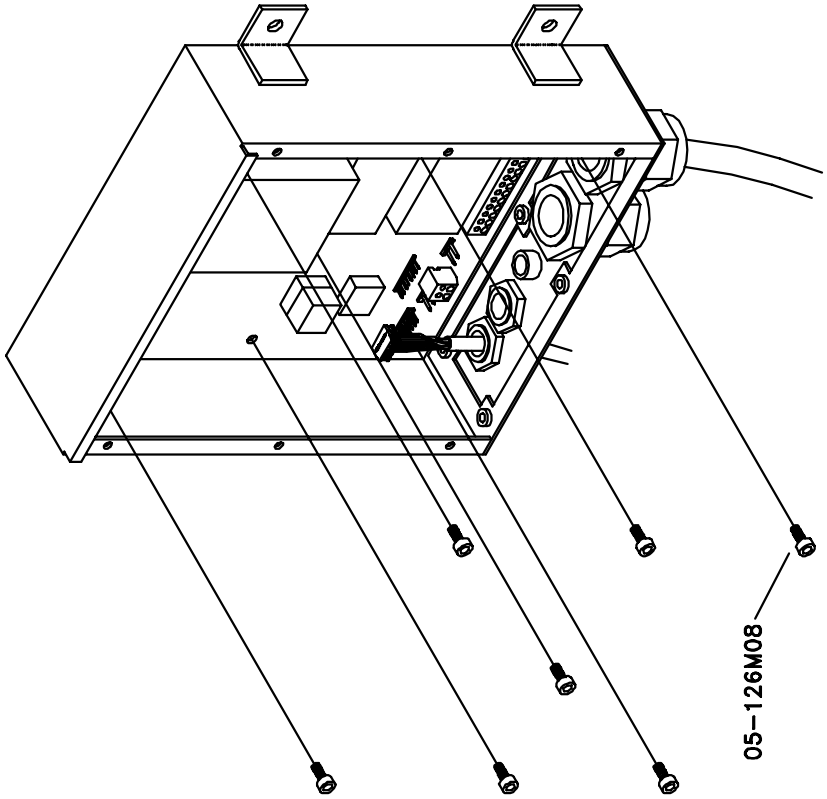

258T08, 7-30-97

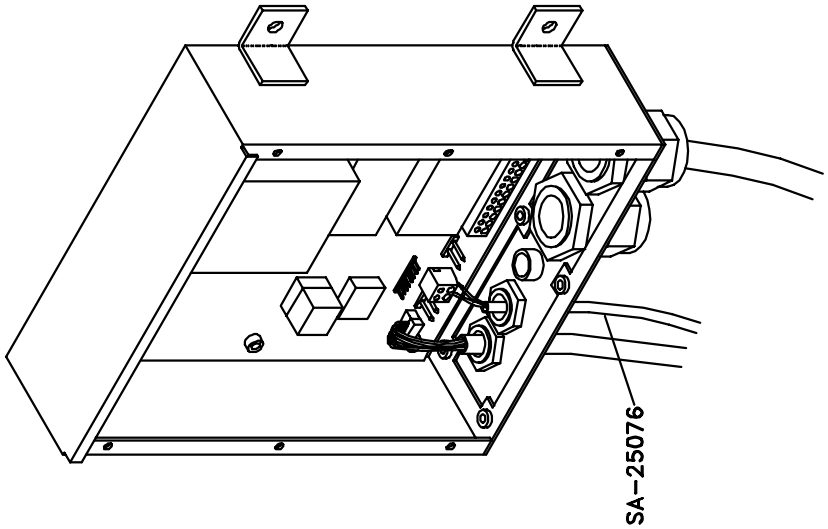

258T09, 7-30-97

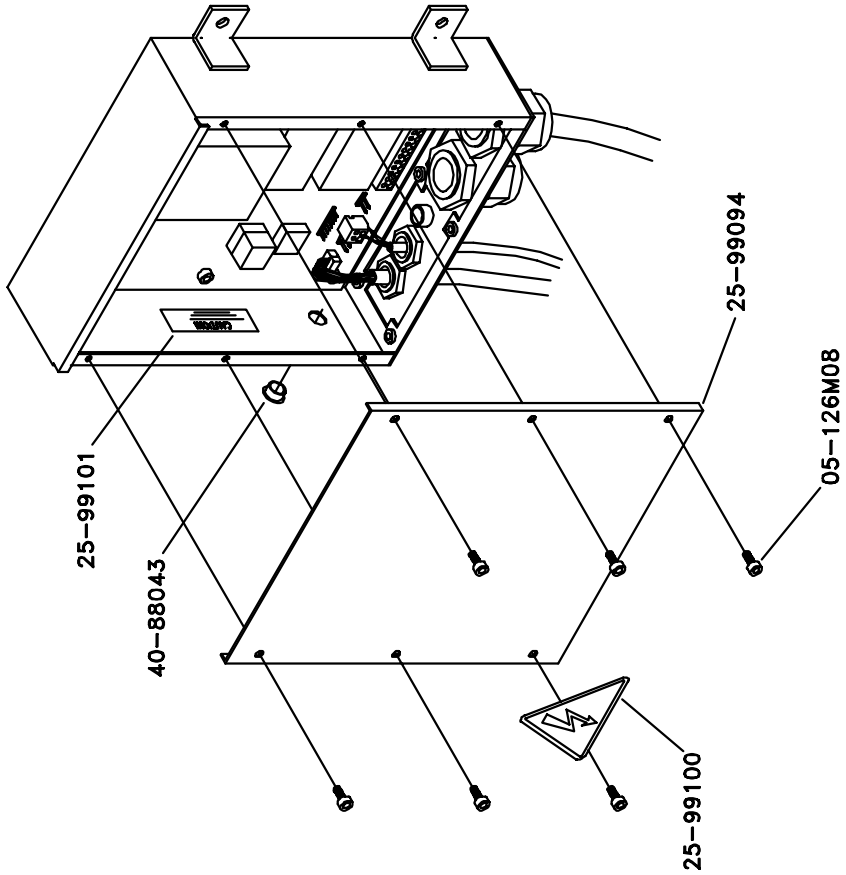

258T10, 7-30-97

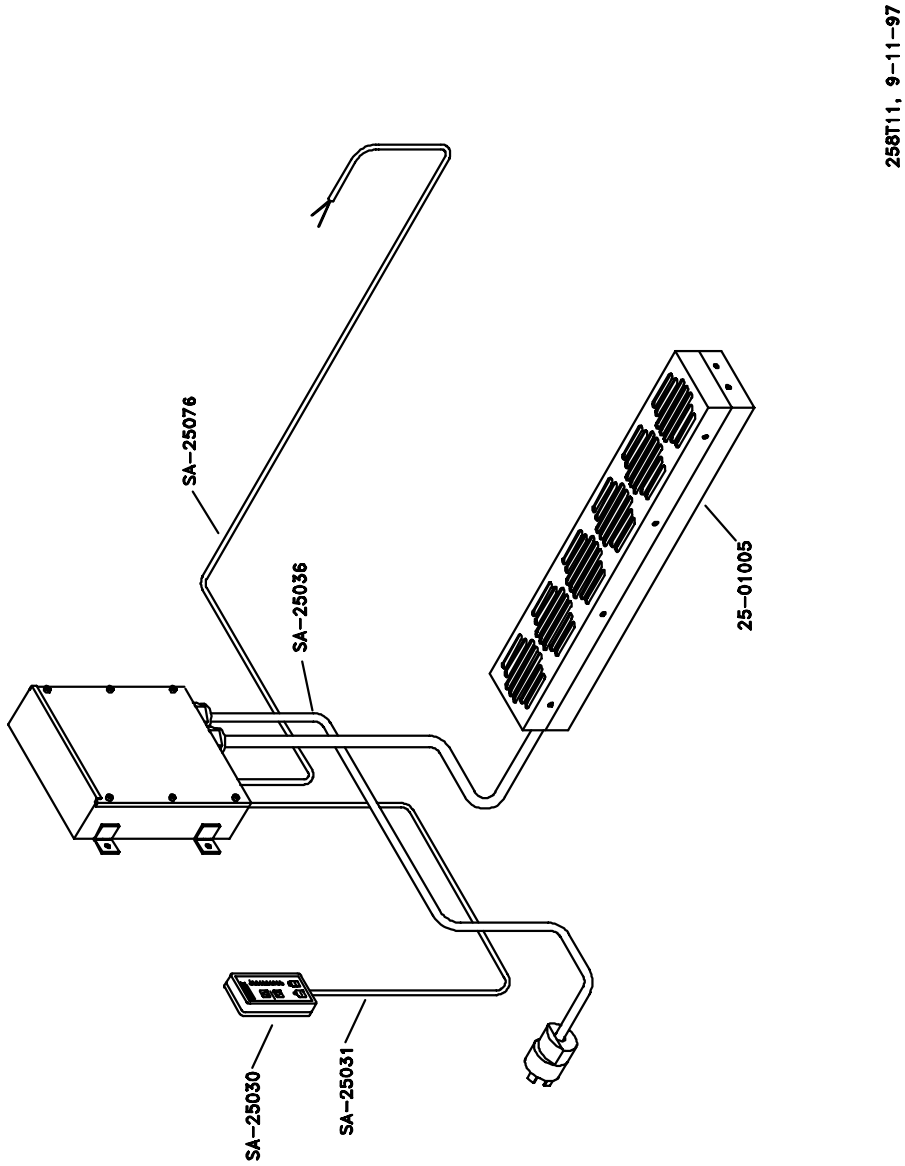

258T11, 9-11-97

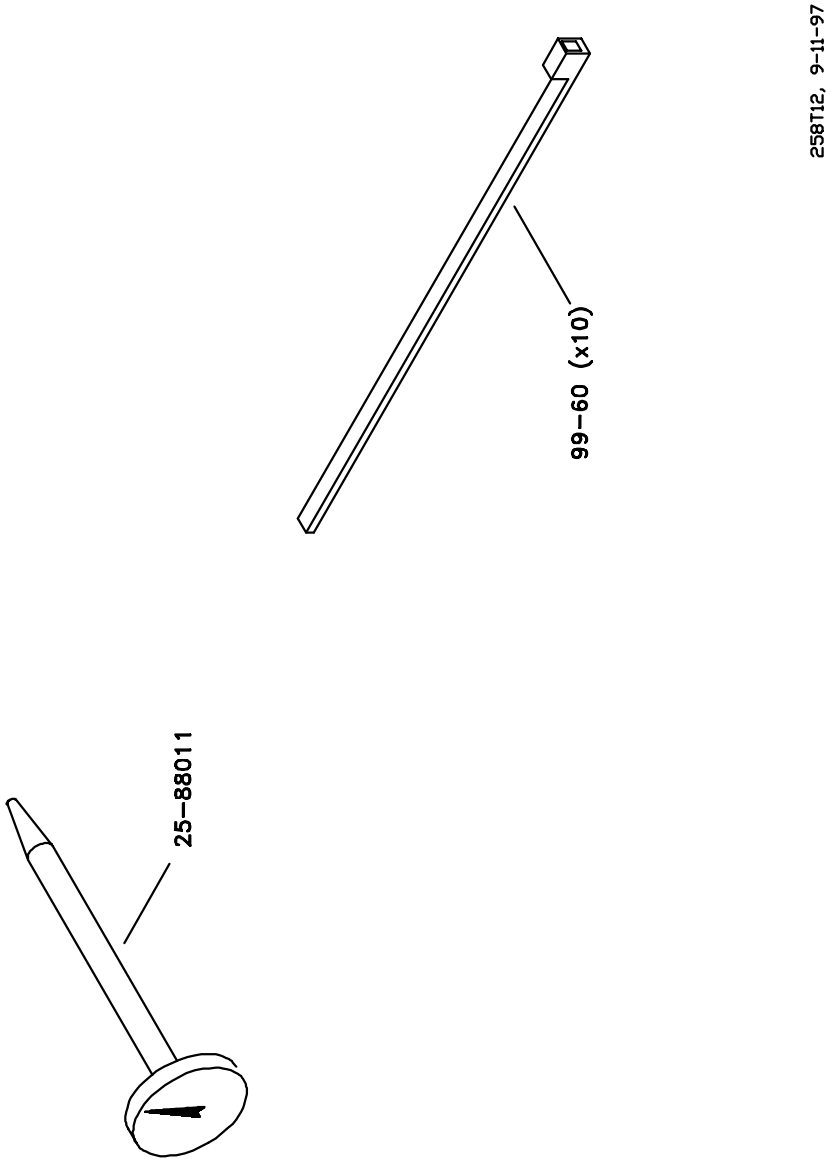
25-88011
99-60 (x10)
258T12, 9-11-97

TheRollerStore.com

ACCEL®

Graphic Systems

11103 Indian Trail, Dallas, TX 75229 Phone 972-484-6808, Fax 800-365-6510
E-mail accel@dallas.net, Web Site www.accelgraphicsystems.com